DH-IPC-HDBW5442H-Z4HE

4MP IR Vari-focal Dome WizMind Network Camera

Launched by Dahua Technology, Dahua WizMind is a full portfolio of solutions composed of project-oriented products including IPC, IVSS,NVR, PTZ, XVR, Thermal and software platform which adopts industry-leading deep learning algorithms. Focusing on customer's requirements, WizMind provides precise, reliable and comprehensive AI solutions for verticals.

Series Overview

Driven by deep learning algorithms, Dahua WizMind S Series network camera offers a variety of intelligent functions that greatly improve the accuracy of audio and video analysis. It supports video metadata, smart sound detection, face detection, perimeter protection, people counting and more. The camera also adopts advanced image processing AI ISP technology and has the Deeplight night vision effect. The camera is dustproof, waterproof and vandal-proof, and is certified as IP67 and IK10 (the type of protection varies depending on the model).

Functions

AI-ISP

With AI ISP technology, the camera is able to easily adapt to scenes, producing high quality images that reveal the fine details of targets.

Self-Learning

Empowered by deep learning technology, the device recognizes different types of targets and their statuses through learning and analyzing target features to detect targets and filter out false alarms.

Perimeter Protection

With deep learning algorithm, Dahua Perimeter Protection technology can recognize human and vehicle accurately. In restricted area (such as pedestrian area and vehicle area), the false alarms of intelligent detection based on target type (such as tripwire, intrusion, fast moving, parking detection, loitering detection and gathering detection) are largely reduced.

AcuPick

This industry-leading search technology effectively utilizes both front-end and back-end intelligence to help with searching through massive video data to quickly and conveniently locate targets with greater precision.

**** The parameters and datasheets below can only be applied to 5442-Z-S3 series.***

- 4-MP 1/1.8" CMOS image sensor, low luminance, and high definition image.
- Outputs max. 4 MP (2688×1520) @25/30 fps.
- Built-in IR LED, and the max. illumination distance is 80 m.
- ROI, SVC, SMART H.264+/H.265+, AI H.264/H.265, encoding after filter, flexible coding, applicable to various bandwidth and storage environments.
- Rotation mode, WDR, 3D NR, HLC, BLC, digital watermarking, applicable to various monitoring scenes.
- With deep learning algorithm, it supports: video metadata, smart sound detection, IVS, face detection, smart object detection, and people counting, etc.
- Alarm: 3 in, 2 out; audio: 1 in, 1 out; RS-485; analog output; power output; supports max. 512 G Micro SD card, built-in dual Mic.
- 24 VAC/12 VDC/PoE power supply; ePoE.
- IP67 and IK10 protection, heater.
- SMD 3.0.
- Anti-corrosion model optional.

People Counting

With deep learning algorithm, Dahua People Counting technology can track and process moving human body targets to realize the accurate statistics of enter No., leave No., and In Area No. Working with management platform, it outputs reports to meet your requirements.

Video Metadata

With deep learning algorithm, Dahua Video Metadata technology can detect, track, capture vehicle, non-motor vehicle and people, and select the best images, and extract attributes.

Cyber Security

Dahua network cameras employ a series of security technologies, including security authentication and authorization, access control protocols, trusted protection, encrypted transmission and encrypted storage. These technologies improve the camera's defense against external cyber threats and prevent malicious programs from compromising the device.

Protection (IP67, IK10, Wide Voltage)

IP67: The camera passes a series of strict test on dust and soak. It has dust-proof function, and the enclosure can work normally after soaking in 1 m deep water for 30 minutes.
IK10: The enclosure can stand the punch more than 5 times from a 5 kg hammer falling from a height of 40 cm (Impact energy is 20J).
Wide voltage: The camera allows ±30% (for some power supplies) input voltage tolerance (wide voltage range), and it is widely applied to outdoor environment with instable voltage.

Technical Specification

Camera

Image Sensor	1/1.8" CMOS
Max. Resolution	2688 (H) × 1520 (V)
ROM	4 GB
RAM	1 GB
Scanning System	Progressive
Electronic Shutter Speed	Auto/Manual 1/3 s–1/100,000 s
Min. Illumination	0.0007 lux@F1.6 (Color,30 IRE) 0.0004 lux@F1.6 (B/W,30 IRE) 0 lux (Illuminator on)
S/N Ratio	>56 dB
Illumination Distance	Up to 80 m (262.47 ft) (IR)
Illuminator On/Off Control	Auto; Zoomprio; Manual
Illuminator Number	3 (IR LED)
Angle Adjustment	Pan: 0°–355° Tilt: 0°–80° Rotation: 0°–355°

Lens

Lens Type	Motorized vari-focal
Lens Mount	Module
Focal Length	8 mm–32 mm
Max. Aperture	F1.6
Field of View	H: 43°–15°; V: 24°–9°; D: 50°–17°
Iris Control	Auto
Iris Control Type	P-Iris
Close Focus Distance	1.5 m (4.92 ft)

	Lens	Detect	Observe	Recognize	Identify
DORI Distance	W	147.3 m (483.27 ft)	58.9 m (193.24 ft)	29.5 m (96.78 ft)	14.7 m (48.23 ft)
	T	395.0 m (1295.93 ft)	158.0 m (518.37 ft)	79.0 m (259.19 ft)	39.5 m (129.59 ft)
	*DORI (Detect, Observe, Recognize, Identify) is a standard system (EN-62676-4) for defining the ability of a person viewing the video to distinguish persons or objects within a covered area. The numbers in this table do not reflect intelligent function distances. For intelligent function distances, refer to installation and commissioning manual/project design tool.				

Intelligence

IVS (Perimeter Protection)	Intrusion, tripwire, fast moving (the three functons support the classifcaton and accurate detecton of vehicle, animal and human); loitering detecton, people gathering, parking detecton. Supports long- distance mode. Supports self-learning, it filters out false alarms.
Smart Object Detection	Smart abandoned object; smart missing object
SMD	SMD 3.0
AcuPick	Uses deep learning algorithms and works with back-end devices to accurately match targets, such as people, animal,and motor vehicles, and search through live and recorded videos to quickly locate targets.
AI SSA	Yes
Face Detection	Face detection; track; snapshot; snapshot optimization; optimal face snapshot upload; face enhancement; face exposure; face attributes extraction including 6 attributes and 8 expressions; face snapshot set as face, one-inch photo or custom; snapshot strategies (real-time snapshot, quality priority and optimization snapshot); face angle filter; optimization time setting.
People Counting	Tripwire people counting, generating and exporting report (day/week/month/year); people counting in area and queue management, generating and exporting report (day/week/month); 4 rules can be set for tripwire, people counting in area and queue management.
Heat Map	Yes
Video Metadata	Motor vehicle, non-motor vehicle, face, human body detection; track; snapshot; snapshot optimization; optimal face snapshot upload. Motor vehicle attributes: vehicle type, vehicle color, vehicle logo and other attributes : seatbelt, smoking, calling. Non-motor vehicle attributes: type, color, number of people, top type and color, hat. Human body attributes: gender, top/bottom type and color, bag, hat and umbrella. Face attributes: gender, age, expressions, glasses, face mask and beard.
Smart Search	Work together with Smart NVR to perform refine intelligent search, event extraction and merging to event videos
Smart Sound Detection	Yes

Video

Video Compression	H.265; H.264; H.264H; H.264B; MJPEG (Only supported by the sub stream)
Smart Codec	Smart H.265+; Smart H.264+
AI Coding	AI H.265; AI H.264
Video Frame Rate	Main stream: 2688 × 1520 (1 fps–25/30 fps) /1920 × 1080 (1 fps–50/60 fps) Sub stream: D1@(1–25/30 fps) Third stream: 1080p@(1–25/30 fps) Fourth stream: 720p@(1–25/30 fps) *The values above are the max. frame rates of each stream; for multiple streams, the values will be subjected to the total encoding capacity.
Stream Capability	4 streams
Resolution	4M (2688 × 1520); 3.6M (2560 × 1440); 3M (2048 × 1536); 3M (2304 × 1296); 1080p (1920 × 1080); 1.3M (1280 × 960); 720p (1280 × 720); D1 (704 × 576/704 × 480); VGA (640 × 480); CIF (352 × 288/352 × 240)
Bit Rate Control	CBR/VBR
Video Bit Rate	H.264: 32 kbps–16384 kbps; H.265: 12 kbps–11008 kbps
Day/Night	Auto(ICR)/Color/B/W
BLC	Yes
HLC	Yes
WDR	140 dB
Scene Self-adaptation (SSA)	Yes

White Balance	Auto; natural; street lamp; outdoor; manual; regional custom
Gain Control	Auto
Noise Reduction	3D NR
Motion Detection	OFF/ON (4 areas, rectangular)
Region of Interest (RoI)	Yes (4 areas)
Image Stabilization	Electronic Image Stabilization (EIS)
Smart Illumination	Yes
Defog	Yes
Image Rotation	0°/90°/180°/270° (Support 90°/270° with 4M (2688 × 1520)resolution and lower)
Mirror	Yes
Privacy Masking	8 areas

Audio

Built-in MIC	Yes, built-in dual Mic
Audio Compression	G.711a; G.711Mu; PCM; G.726; G.723

Alarm

Alarm Event	No SD card; SD card full; SD card error; network disconnection; IP conflict; illegal access; motion detection; video tampering; tripwire; intrusion; fast moving; abandoned object; missing object; loitering detection; people gathering; parking detection; scene changing; audio detection; voltage detection; external alarm; face detection; video metadata; SMD; people counting in area; stay detection; people counting; people number error detection; queue people number alarm; queue time alarm; security exception

Network

Network Port	RJ-45 (10/100 Enhancement Base-T)
SDK and API	Yes
Network Protocol	IPv4; IPv6; HTTP; TCP; UDP; ARP; RTP; RTSP; RTCP; RTMP; SMTP; FTP; SFTP; DHCP; DNS; DDNS; QoS; UPnP; NTP; Multicast; ICMP; IGMP; NFS; SAMBA; PPPoE; SNMP; P2P; Auto Register
Interoperability	ONVIF (Profile S/Profile G/Profile T/Profile M); CGI
User/Host	20 (Total bandwidth: 80 M)
Storage	FTP; SFTP; Micro SD card (support max. 1 TB); NAS
Browser	IE: IE 9 and later Chrome: Chrome 102 and later Firefox: Firefox 88 and later
Management Software	SmartPSS Lite; DSS; DMSS
Mobile Client	iOS; Android
Cyber Security	Configuration encryption; trusted execution; Digest; security logs; WSSE; account lockout; syslog; video encryption; 802.1x; IP/MAC filtering; HTTPS; trusted upgrade; trusted boot; firmware encryption; generation and importing of X.509 certification

Certification

Certifications	CE-LVD: EN62368-1 CE-EMC: Electromagnetic Compatibility Directive 2014/30/EU FCC: 47 CFR FCC Part 15, Subpart B UL/CUL: UL62368-1 & CAN/CSA C22.2 No. 62368-1-14, UL 50E NEMA Type 4X (optional)

Port

RS-485	1 (baud rate range:1200 bps–115200 bps)
Audio Input	1 channel (terminal)
Audio Output	1 channel (terminal)
Alarm Input	3 channels in: wet contact, 5mA 3V–5V DC
Alarm Output	2 channels out: dry contact, 1,000 mA 30V DC/500m A 50V AC
Analog Output	1 channel (CVBS output: built-in 2 pin (testing))
Power Output	12 VDC power output, max. current 165 mA, peak current 700 mA

Power

Power Supply	12 VDC/24 VAC/PoE (802.3at)/ePoE
Dual Power Backup	When the power adapter and PoE provide power at the same time, disconnect one of them. The device will continue to work, but will not restart.
Power Consumption	Basic: 4 W (12 VDC); 5 W (24 VAC); 4.9 W (PoE) Max. (Focus+WDR+ Intelligence on+IR on): 12.3 W (12 VDC); 15.2 W (24 VAC); 15.2 W (PoE) Heating: 3 W (12 VDC); 3.8 W (24 VAC); 3.9 W (PoE)

Environment

Operating Temperature	–40 °C to +60 °C (–40 °F to +140 °F)
Operating Humidity	≤95%
Storage Temperature	–40 °C to +60 °C (–40 °F to +140 °F)
Storage Humidity	10%–95% (RH), non-condensing
Protection	IP67; IK10

Structure

Casing Material	Metal
Product Dimensions	Φ158 mm × 129.1 mm (6.22" × Φ5.08")
Net Weight	1.1 kg (2.43 lb)
Gross Weight	1.6 kg (3.53 lb)

Ordering Information

Type	Model	Description
4MP Camera	DH-IPC-HDBW5442H-Z4HE	4MP IR Vari-focal Dome WizMind Network Camera
	IPC-HDBW5442H-Z4HE	4MP IR Vari-focal Dome WizMind Network Camera
Accessories (Optional)	PFB211W	Wall Mount Bracket
	PFA773	Wall Mount (sunshade)
	PFA152-E	Pole Mount Bracket
	PFA101	Mount Adapter
	PFB300C	Ceiling Mount Bracket
	PFB211WA	Anti-corrosion Wall Mount Bracket
	PFA152A-E	Anti-corrosion Pole Mount Braket
	PFA101A	Anti-corrosion Mount Adapter
	PFB300CA	Anti-corrosion Ceiling Mount Bracket
	PFM320D	12 VDC 2A Power Adapter
	PFM900-E	Integrated Mount Tester
	TF-P100	MicroSD Memory Card

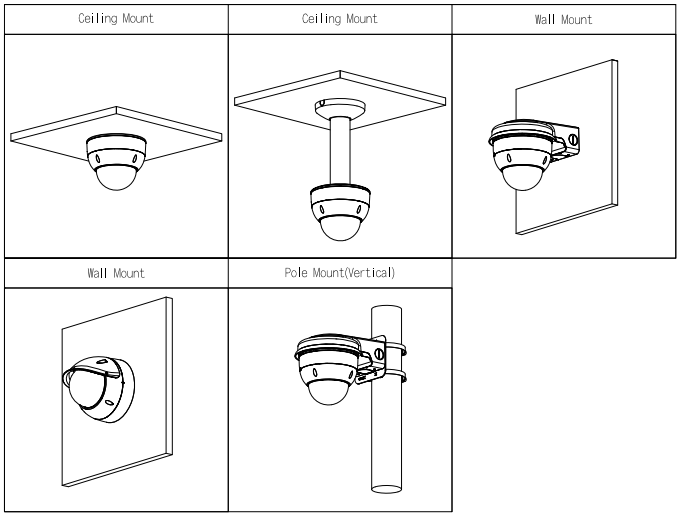

Accessories

Optional:

PFB211W
Wall Mount
Bracket

PFA773
Wall Mount
(sunshade)

PFA152-E
Pole Mount
Bracket

PFA101
Mount Adapter

PFB300C
Ceiling Mount
Bracket

PFB211WA
Anti-corrosion
Wall Mount
Bracket

PFA152A-E
Anti-corrosion Pole
Mount Braket

PFA101A
Anti-corrosion Mount
Adapter

PFB300CA
Anti-corrosion
Ceiling Mount
Bracket

PFM900-E
Integrated
Mount Tester

TF-P100
MicroSD
Memory Card

Dimensions (mm[inch])

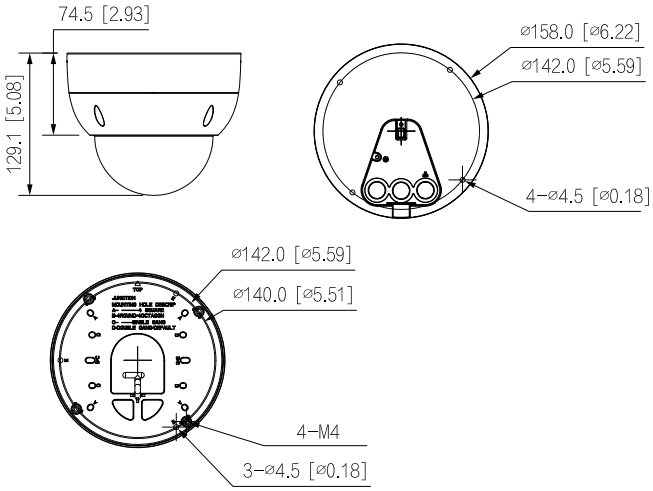

Rev 002.000
© 2024 Dahua. All rights reserved. Design and specifications are subject to change without notice.
The images, specifications and information mentioned in the document are only for reference, and might differ from the actual product.